Multi-angle Milling Head
Model: **VAR-3**

Technical specifications:

Milling head power	22 kW
Maximum torque	1.000 Nm
Maximum speed	3.000 rpm
Bodies rotation	Manual
Tool camping system	Hydromechanic
Tool taper	ISO 50 - DIN 69871 (or others)
Pull-stud	DIN 69872 (or others)
Bearings lubrication	Manual greasing
Gears lubrication	Manual greasing

Optionally:

External tool cooling.
Internal tool cooling, form AD, with rotary joint.
Maximum speed 4.000 rpm (by bearings cooling).
Possibility to fit to different machines on their bases/couplings.
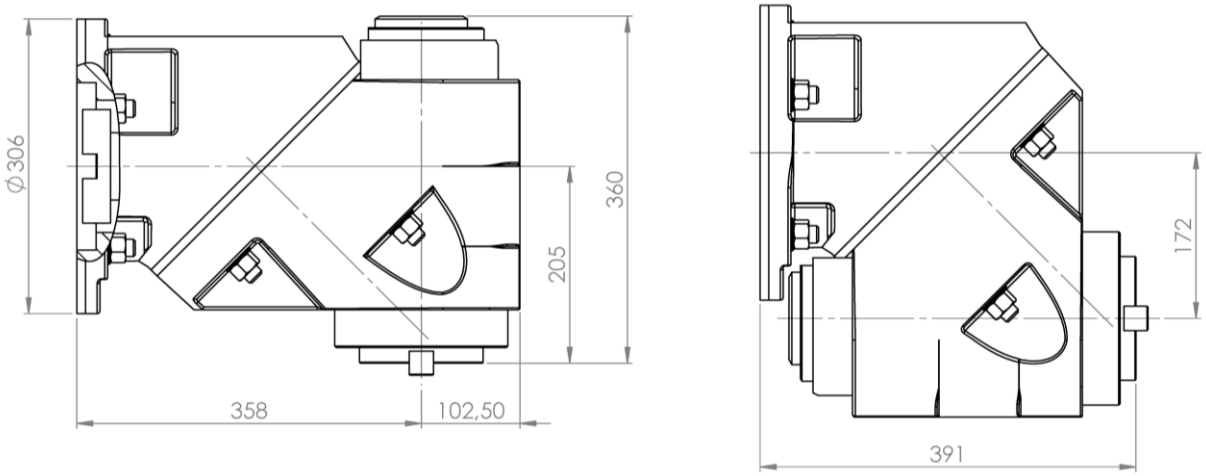
General Dimensions